WX745.9

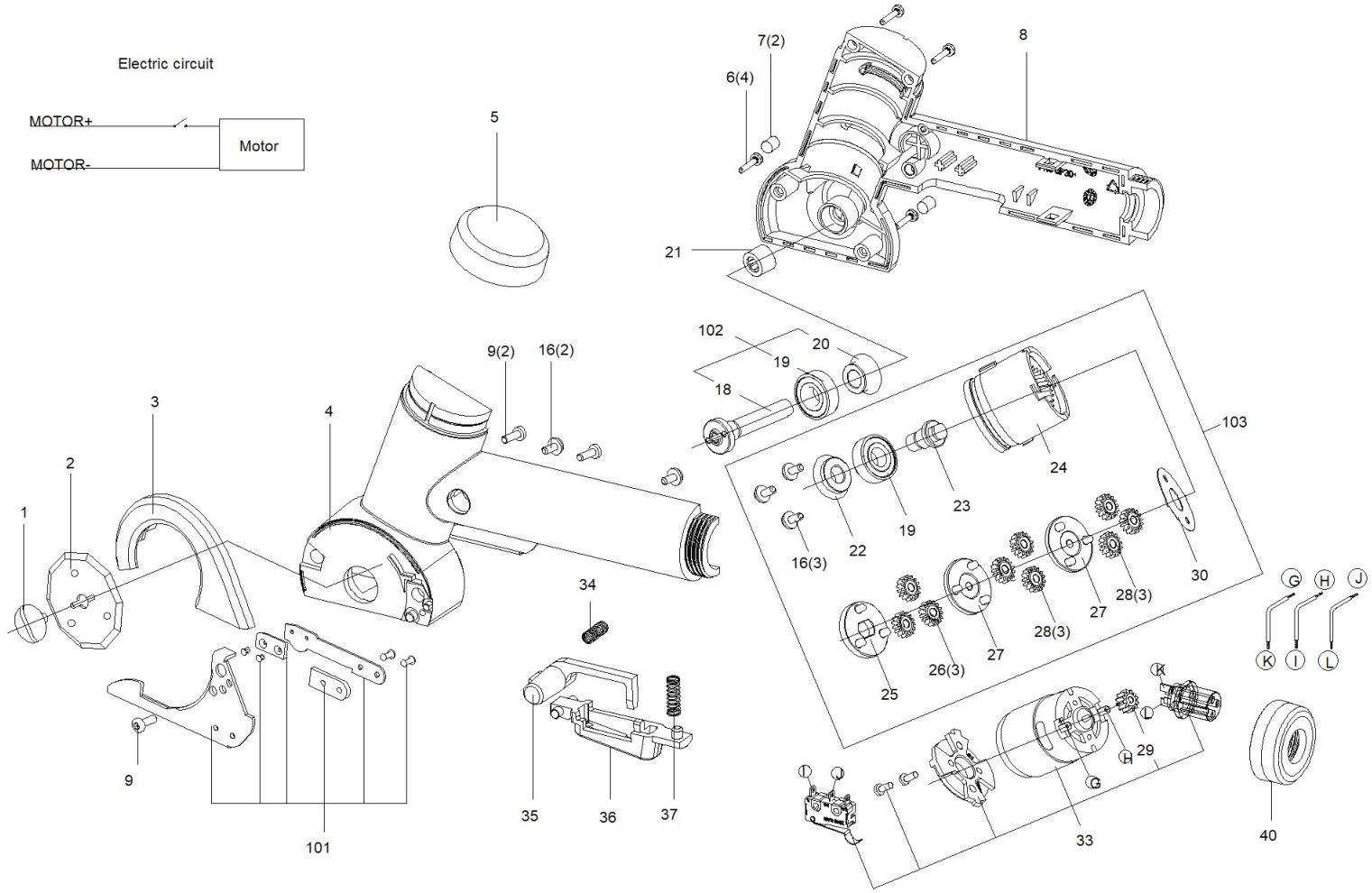
Electric circuit
MOTOR+
MOTOR-
Motor
1
2
3
4
5
6(4)
7(2)
8
9
9(2)
16(2)
16(3)
18
19
20
21
22
23
24
25
26(3)
27
28(3)
29
30
33
34
35
36
37
40
101
102
103
G
H
I
J
K
L

WX745.9

	Part No	Description	Qty
1	50019448	Screw	1
2	50045558	Blade	1
3	50019446	Blade Guard	1
4	50045565	Left Housing	1
5	50045560	Decorative Sleeve	1
6	50024175	Self Tapping Screw	4
7	50000773	Rubber-pin	2
8	50045568	Right Housing	1
9	50002936	Self tapping screw	3
16	50019450	Self Tapping Screw	5
18	50019451	Spindle Ii	1
19	50003137	Bearing	2
20	50019452	Gear Ii	1
21	50019453	Needle Bearing	1
22	50019455	Gear I	1
23	50019456	Spindle I	1
24	50045735	Ring Gear	1
25	50019458	Planet Carrier Ii	1
26	50019714	Planetary Gear	3
27	50019715	Planet Carrier	2

WX745.9

	Part No	Description	Qty
28	50019716	Planetary Gear	6
29	50019241	Pinion	1
30	50045736	Washer	1
33	50045738	Motor	1
34	50019662	Compression Spring	1
35	50045566	Switch Lock Button	1
36	50045562	Button	1
37	50045563	Spring	1
40	50042988	Tighten Collar	1
101	50019464	Roller Guide Assembly	1
102	50019465	Output Shaft Set	1
103	50045564	Gear Case	1